Work Order ID 53031

October 22, 2009 10:05:58 AM

Item ID: D3849-043 46 **Accept** **Setup Start** **Stop**

Revision ID: B

Item Name: AFT WEARPLATE ASSY, STD GEAR

Start Date: 21/10/2009 **Start Qty:** 4.00 **Cust Item ID:**

Required Date: 23/10/2009 **Req'd Qty:** 4.00 **Customer:**

Reference:

Run Start **Stop**

Approvals: **Process Plan:** BJ **Date:** 09-10-22 **Tooling:** _____ **Date:** _____

QC: _____ **Date:** _____ **SPC (Y/N):** _____ **Date:** _____

Sequence ID/ Work Center ID	Operation Description	Set Up/ Run Hours	Draw Number	Draw Rev.	Plan Code	Accept Qty	Reject Qty	Reject Number	Insp. Stamp
Draw Nbr	**Revision Nbr**								
D3849	B								
100		0.00							
Waterjet	**Memo**	0.00							
FLOW CNC Waterjet	1-Cut as per Dwg D3849 Dwg Rev: B Prog Rev: B 2-Deburr if necessary						IB 9-10-26		
110	QC2- Inspect parts off machine FAI/FAIB	0.00							
QC	**Memo**	0.00					IB 9-10-26		
Quality Control									

SCRAP

SCRAP Now at Rev D

EL 12-10-16

Work Order ID 53031

October 22, 2009 10:05:58 AM

Item ID: D3849-043
Revision ID: B
Item Name: AFT WEARPLATE ASSY, STD GEAR

Accept

Setup **Start**
Stop

Start Date: 21/10/2009 **Start Qty:** 4.00
Required Date: 23/10/2009 **Req'd Qty:** 4.00
Reference:

Cust Item ID:
Customer:

Run **Start**
Stop

Approvals: **Process Plan:** _____ **Date:** _____ **Tooling:** _____ **Date:** _____
QC: _____ **Date:** _____ **SPC (Y/N):** _____ **Date:** _____

Sequence ID/ Work Center ID	Operation Description	Set Up/ Run Hours	Draw Number	Draw Rev.	Plan Code	Accept Qty	Reject Qty	Reject Number	Insp. Stamp
120 QC Quality Control	QC8- Inspect parts - second check **Memo**	0.00 0.00				(x4)	4		
130 Brake NC Brake NC	**Memo** Form as per dwg using DT8179 & DT8155	0.00 0.00				(4)	0		
140 QC Quality Control	QC5- Inspect part completeness to step on W/O **Memo**	0.00 0.00				(x8)	4		

Work Order ID 53031

October 22, 2009 10:05:58 AM

Item ID: D3849-043
Revision ID: B
Item Name: AFT WEARPLATE ASSY, STD GEAR

Start Date: 21/10/2009 **Start Qty:** 4.00
Required Date: 23/10/2009 **Req'd Qty:** 4.00
Reference:

Accept

Setup **Start** **Stop**

Cust Item ID:
Customer:

Run **Start** **Stop**

Approvals: **Process Plan:** _____ **Date:** _____ **Tooling:** _____ **Date:** _____
QC: _____ **Date:** _____ **SPC (Y/N):** _____ **Date:** _____

Sequence ID/ Work Center ID	Operation Description	Set Up/ Run Hours	Draw Number	Draw Rev.	Plan Code	Accept Qty	Reject Qty	Reject Number	Insp. Stamp
150		0.00							
Large Fab	**Memo**	0.00							
Large Fab	1- On D3901 bar, fill cut outs with hardcoat welding rod as per dwg D3849 2059 B Hardcoat Welding Rod BATCH#:_____ 2- Weld D3901 bar to wearplate by positioning holes togetheras per dwg D3849 304 S.S. Welding Rod BATCH #:_____								
160	QC9- Inspect visual per QSI004- Fusion Welds	0.00							
QC	**Memo**	0.00							
Quality Control									

Work Order ID 53031

October 22, 2009 10:05:58 AM

Item ID: D3849-043
Revision ID: B
Item Name: AFT WEARPLATE ASSY, STD GEAR

Accept

Setup Start
Stop

Start Date: 21/10/2009 **Start Qty:** 4.00
Required Date: 23/10/2009 **Req'd Qty:** 4.00
Reference:

Cust Item ID:
Customer:

Run Start
Stop

Approvals: **Process Plan:** _____ **Date:** _____ **Tooling:** _____ **Date:** _____
QC: _____ **Date:** _____ **SPC (Y/N):** _____ **Date:** _____

Sequence ID/ Work Center ID	Operation Description	Set Up/ Run Hours	Draw Number	Draw Rev.	Plan Code	Accept Qty	Reject Qty	Reject Number	Insp. Stamp
170	QC5- Inspect part completeness to step on W/O	0.00							
QC	**Memo**	0.00							
Quality Control									
180	Grey Sandtex(Ref:4.3.5.6) per QSI005 4.3	0.00							
Powdercoat	**Memo**	0.00							
Powder Coating	START TIME: _____ OVEN TEMPERATURE: _____ FINISH TIME: _____								
190	QC3- Inspect Part Finish	0.00							
QC	**Memo**	0.00							
Quality Control									

Work Order ID 53031

October 22, 2009 10:05:58 AM

Item ID: D3849-043 **Accept** **Setup Start**

Revision ID: B **Stop**

Item Name: AFT WEARPLATE ASSY, STD GEAR

Start Date: 21/10/2009 **Start Qty:** 4.00 **Cust Item ID:**

Required Date: 23/10/2009 **Req'd Qty:** 4.00 **Customer:**

Reference:

Run Start

Approvals: **Process Plan:** _____ **Date:** _____ **Tooling:** _____ **Date:** _____

Stop

QC: _____ **Date:** _____ **SPC (Y/N):** _____ **Date:** _____

Sequence ID/ Work Center ID	Operation Description	Set Up/ Run Hours	Draw Number	Draw Rev.	Plan Code	Accept Qty	Reject Qty	Reject Number	Insp. Stamp
200		0.00							
Small Fab	**Memo**	0.00							
Small Fab	1- Bond D3848 gasket to inner surface of wearplate using a thin layer of 3m 1300/1300L scotch grip adhesive as per dwg D3849 BATCH:_____								
210	QC5- Inspect part completeness to step on W/O	0.00							
QC	**Memo**	0.00							
Quality Control									
220	Identify as per dwg & Stock Location:_____	0.00							
Packaging	**Memo**	0.00							
Packaging									

Work Order ID 53031

October 22, 2009 10:05:58 AM

Item ID: D3849-043
Revision ID: B
Item Name: AFT WEARPLATE ASSY, STD GEAR

Accept

Setup **Start**
Stop

Start Date: 21/10/2009 **Start Qty:** 4.00
Required Date: 23/10/2009 **Req'd Qty:** 4.00
Reference:

Cust Item ID:
Customer:

Run **Start**
Stop

Approvals: **Process Plan:** _____ **Date:** _____ **Tooling:** _____ **Date:** _____
QC: _____ **Date:** _____ **SPC (Y/N):** _____ **Date:** _____

Sequence ID/ Work Center ID	Operation Description	Set Up/ Run Hours	Draw Number	Draw Rev.	Plan Code	Accept Qty	Reject Qty	Reject Number	Insp. Stamp
230	QC21- Final Inspection - Work Order Release	0.00							
QC Quality Control	**Memo**	0.00							

Picklist Print

October 22, 2009 10:06:03 AM

Work Order ID: 53031

Parent Item: D3849-043RevB

Parent Item Name: AFT WEARPLATE ASSY, STD GEAR

Start Date: 21/10/2009 **Required Date:** 23/10/2009

Comments:

Start Qty: 4.00 **Required Qty:** 4.00

Component Item ID/ Item Name	Replacement Item ID	Mfg/ Purch	Bin Item	Primary Location	Last Location	Route Seq ID	Unit of Measure	Qty on Hand	Remaining Qty To Pick	Qty Issued	Date Issued	Status
D3848-3RevB Gasket		Manufactured	No				Each	12.0000	4.0000			
				Warehouse Location		**Loc Qty**		**Loc Code**				
				Main Warehouse								
				ST181		12						
				52531		12						
D3901-3RevB Bar		Manufactured	No				Each	0.0000	4.0000			
M304S18GA 304/316 .050 Sheet		Purchased	No				sf	197.0169	12.8421		IB 9-10-26	
				Warehouse Location		**Loc Qty**		**Loc Code**				
				Main Warehouse								
				MAT		197.0169053						
				108156		0.98526316						
				111743		23.7174						
				112178		44.3142421						
				112885		128				112885		

DART AEROSPACE LTD	Work Order:	53031
Description: Wearplate	Part Number:	D3849-3
		043
Inspection Dwg: D3849 Rev: B		Page 1 of 1

FIRST ARTICLE INSPECTION CHECKLIST

[X] First Article [ ] Prototype

Drawing Dimension	Tolerance	Actual Dimension	Accept	Reject	Method of Inspection	Comments
Ø0.188	+0.005/-0.001	.193	X			
Ø0.375	+0.006/-0.001	.376	X			
0.125	+/-0.010	.129	X			
0.88	+/-0.030	.881	X			
0.25	+/-0.030	.250	X			
2.45	+/-0.030	2.45	X			
4.38	+/-0.030	4.378	X			
7.00	+/-0.030	7.003	X			
51.000	+/-0.010	51.000	X			
66.87	+/-0.030	66.87	X			
2.433	+/-0.010	2.438	X			
6.642	+/-0.010	6.640	X			
18.712	+/-0.010	18.712	X			
36.629	+/-0.010	36.629	X			
62.799	+/-0.010	62.799	X			
4.00	+/-0.030	4.001	X			
7.72	+/-0.030	7.714	X			
0.050	+/-0.010	.049	X			

Measured by:	RB	Audited by:	S	Prototype Approval:	N/A
Date:	9-10-26	Date:	02/10/27	Date:	N/A

Rev	Date	Change		Revised by	Approved
A	09.10.01	New Issue	P/O D3849-043	KJ	

ITEM	QTY -041	QTY -043	QTY -045	QTY -047	P/N	DESCRIPTION
1	X				D3849-041	FWD WEARPLATE ASSY, STD GEAR
2		X			D3849-043	AFT WEARPLATE ASSY, STD GEAR
3			X		D3849-045	AFT WEARPLATE ASSY, FLOAT GEAR
4				X	D3849-047	FWD WEARPLATE ASSY, FLOAT GEAR
11	1				D3849-1	PLATE
12		1			D3849-3	PLATE
13			1		D3849-5	PLATE
14				1	D3849-7	PLATE
15	1				D3848-1	GASKET
16		1			D3848-3	GASKET
17			1		D3848-5	GASKET
18				1	D3848-7	GASKET
19	1			1	D3901-1	BAR
20		1			D3901-3	BAR
21			1		D3901-5	BAR
31	A/R	A/R	A/R	A/R	2059B	HARDCOAT
32	A/R	A/R	A/R	A/R	1300 (OR 1300L)	3M SCOTCH-GRIP ADHESIVE

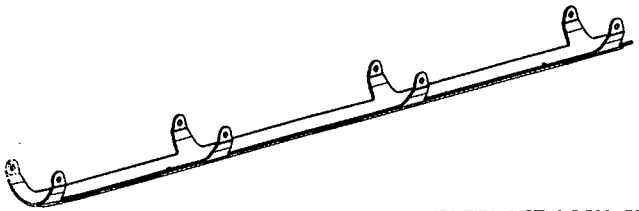

D3849-041 FWD WEARPLATE ASSY, STD GEAR

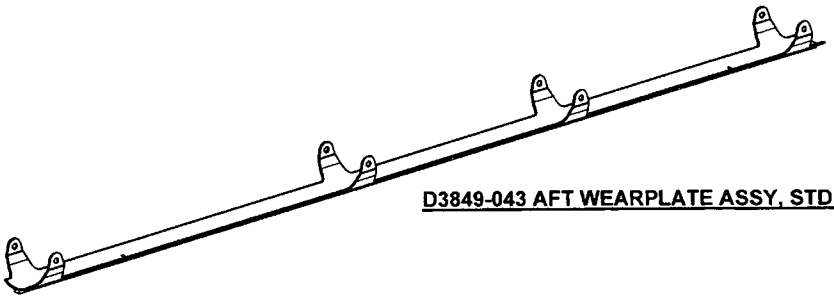

D3849-043 AFT WEARPLATE ASSY, STD GEAR

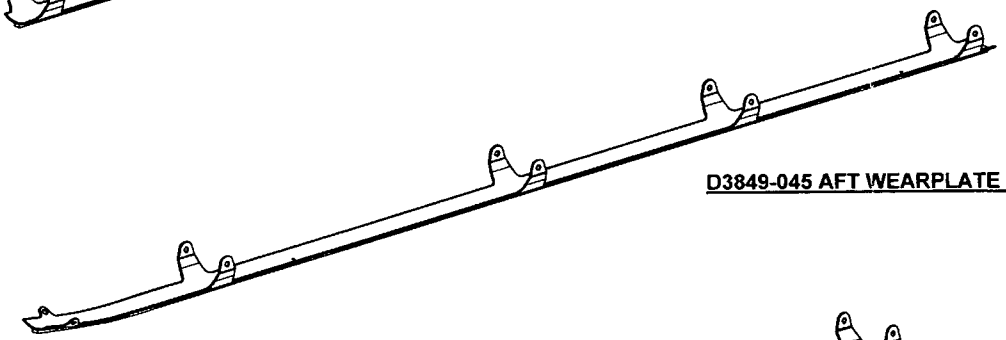

D3849-045 AFT WEARPLATE ASSY, FLOAT GEAR

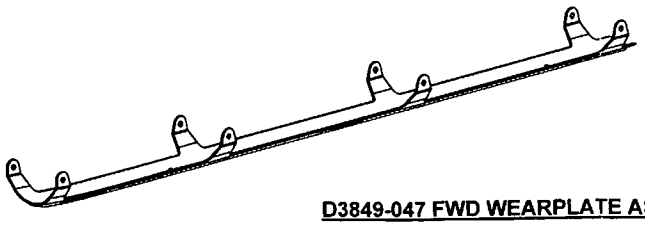

D3849-047 FWD WEARPLATE ASSY, FLOAT GEAR B

SHOP COPY
RETURN TO
ENGINEERING
UNCONTROLLED COPY
SUBJECT TO AMENDMENT
WITHOUT NOTICE
WORK ORDER
NO. 53031
09-10-22

RELEASED
09/07/15

REV.	DESCRIPTION	BY	DATE
B	REVISED FLAT PATTERN Ø0.375 WAS SLOT HOLE ON D3849-1F/-3F/-5F (ZN A4-5,B4-7, B4-8, C2-10, B2-10); ADD D3849-047 (ZN D4-1, A4-1 & B4-5) & D3849-7/-7F (ZN C4-9, A4-9); ADD SECTION K-K (ZN C5-10); 0.88 WAS 0.875 & 0.44 WAS 0.438 (ZN A3-10); ADD 0.25 & 0.88 (ZN D4-10, D3-10); ADD 0.88 & 0.44 (ZN C3-10 & B3-10); ADD FLAG NOTE (ZN A8-2, C6-2, C3-2, A8-3, C6-3, C3-3, A8-4, C6-4, C2-4); 66.87 WAS 67.36 (ZN B4-7)	RF	09.06.30
A	NEW ISSUE	RF	09.03.30

DESIGN	RF	DART AEROSPACE USA, INC. PORT HADLOCK, WA
DRAWN	RF	
CHECKED	PH	DRAWING NO. D3849 — REV. B — SHEET 1 OF 10
MFG. APPR.		
APPROVED		TITLE WEARPLATE ASSY — SCALE NTS
DE APPR.		
DATE	09.06.30	

COPYRIGHT © 2009 BY DART AEROSPACE USA, INC.
THIS DOCUMENT IS PRIVATE AND CONFIDENTIAL AND IS SUPPLIED ON THE EXPRESS CONDITION THAT IT IS NOT TO BE USED FOR ANY PURPOSE OR COPIED OR COMMUNICATED TO ANY OTHER PERSON WITHOUT WRITTEN PERMISSION FROM DART AEROSPACE USA, INC.

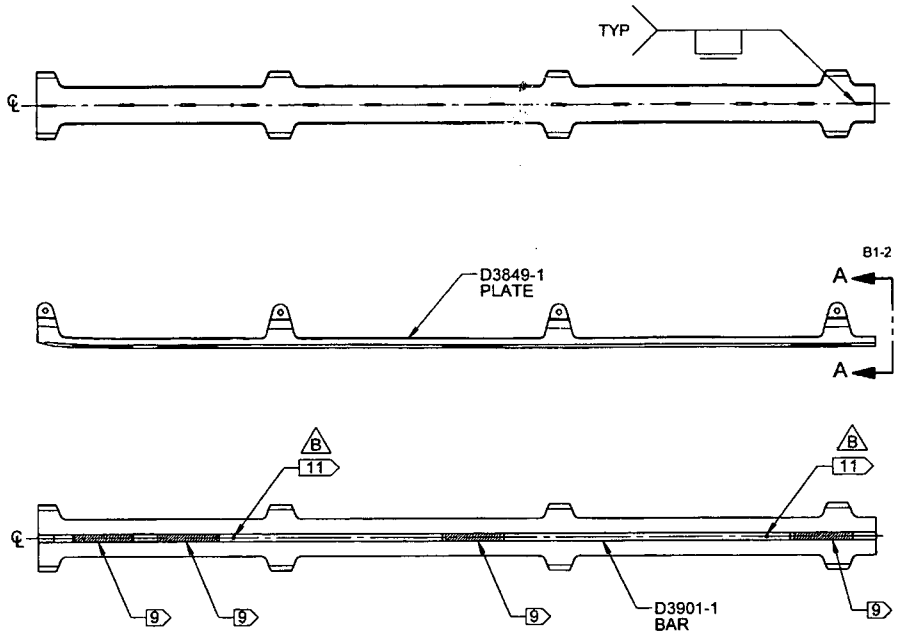

D3849-041 FWD WEARPLATE ASSY, STD/FLOAT GEAR (B)

SHOP COPY
RETURN TO
ENGINEERING
UNCONTROLLED COPY
SUBJECT TO AMENDMENT
WITHOUT NOTICE
WORK ORDER
NO. 53031

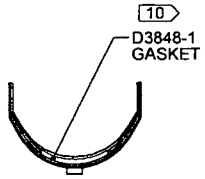

SECTION A-A C3-2
SCALE 2X

RELEASED
09/07/15

NOTES:
1) MATERIAL: N/A
2) FINISH: POWDER COAT "GREY SANDTEX" (4.3.5.6) PER DART QSI 005 4.3
3) TOLERANCES: PER DART QSI 018 UNLESS OTHERWISE NOTED
4) UNITS: INCHES UNLESS OTHERWISE NOTED
5) BREAK SHARP EDGES: 0.005 TO 0.010 MAX
6) IDENTIFICATION: IDENTIFY WITH DART P/N "D3849-041" USING YELLOW PAINT MARKER AT INSIDE SURFACE
7) WEIGHT: D3849-041 = 4.24 lbs
8) WELDING: PER QSI 004
9) 2059B HARDCOAT WELD, 0.19 THICK x 0.50 WIDE, FLUSH WITH D3901-1 BAR ON ALL 3 SURFACES
10) AFTER FINISH, BOND D3848-1 GASKET TO INNER SURFACE OF WEARPLATE USING A THIN LAYER OF 3M 1300/1300L SCOTCH GRIP ADHESIVE
(B) 11) TRANSFER DRILL Ø0.188 HOLES FROM D3849-1 PLATE TO D3901-1 BAR

DESIGN	RF	**DART AEROSPACE USA, INC.** PORT HADLOCK, WA
DRAWN	RF	
CHECKED	RF	DRAWING NO. D3849 — REV. B — SHEET 2 OF 10
MFG. APPR.		
APPROVED		TITLE: WEARPLATE ASSY — SCALE: NTS
DE APPR.		
DATE	09.06.30	

COPYRIGHT © 2009 BY DART AEROSPACE USA, INC.
THIS DOCUMENT IS PRIVATE AND CONFIDENTIAL AND IS SUPPLIED ON THE EXPRESS CONDITION THAT IT IS NOT TO BE USED FOR ANY PURPOSE OR COPIED OR COMMUNICATED TO ANY OTHER PERSON WITHOUT WRITTEN PERMISSION FROM DART AEROSPACE USA, INC.

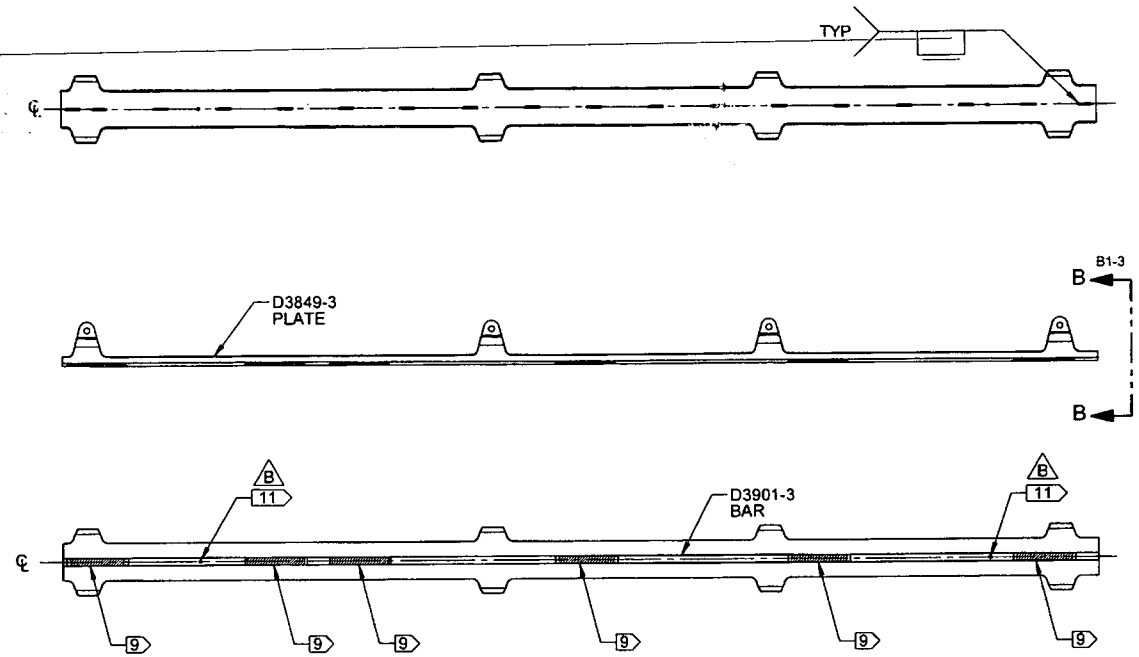

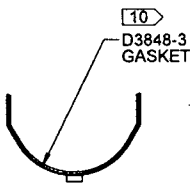

SECTION B-B C2-3
SCALE 2X

SHOP COPY
RELEASED
ENGINEERING
UNCONTROLLED COPY
SUBJECT TO ALTERATION
WITHOUT NOTICE
WORK ORDER
NO. 53031

RELEASED 09/07/15

D3849-043 AFT WEARPLATE ASSY, STD GEAR

NOTES:
1) MATERIAL: N/A
2) FINISH: POWDER COAT "GREY SANDTEX" (4.3.5.6) PER DART QSI 005 4.3
3) TOLERANCES: PER DART QSI 018 UNLESS OTHERWISE NOTED
4) UNITS: INCHES UNLESS OTHERWISE NOTED
5) BREAK SHARP EDGES: 0.005 TO 0.010 MAX
6) IDENTIFICATION: IDENTIFY WITH DART P/N "D3849-043" USING FINE POINT PERMANENT INK MARKER
7) WEIGHT: D3849-043 = 5.21 lbs
8) WELDING: PER QSI 004
9) 2059B HARDCOAT WELD, 0.19 THICK x 0.50 WIDE, FLUSH WITH D3901-3 BAR ON ALL 3 SURFACES
10) AFTER FINISH, BOND D3848-3 GASKET TO INNER SURFACE OF WEARPLATE USING A THIN LAYER OF 3M 1300/1300L SCOTCH GRIP ADHESIVE
B 11) TRANSFER DRILL Ø0.188 HOLES FROM D3849-3 PLATE TO D3901-3 BAR

DESIGN	RF	**DART AEROSPACE USA, INC.** PORT HADLOCK, WA
DRAWN	RF	DRAWING NO. D3849 — REV. B — SHEET 3 OF 10
CHECKED	RF	
MFG. APPR.		
APPROVED		TITLE: WEARPLATE ASSY — SCALE: NTS
DE APPR.		
DATE	09.06.30	

COPYRIGHT © 2009 BY DART AEROSPACE USA, INC.
THIS DOCUMENT IS PRIVATE AND CONFIDENTIAL AND IS SUPPLIED ON THE EXPRESS CONDITION THAT IT IS NOT TO BE USED FOR ANY PURPOSE OR COPIED OR COMMUNICATED TO ANY OTHER PERSON WITHOUT WRITTEN PERMISSION FROM DART AEROSPACE USA, INC.

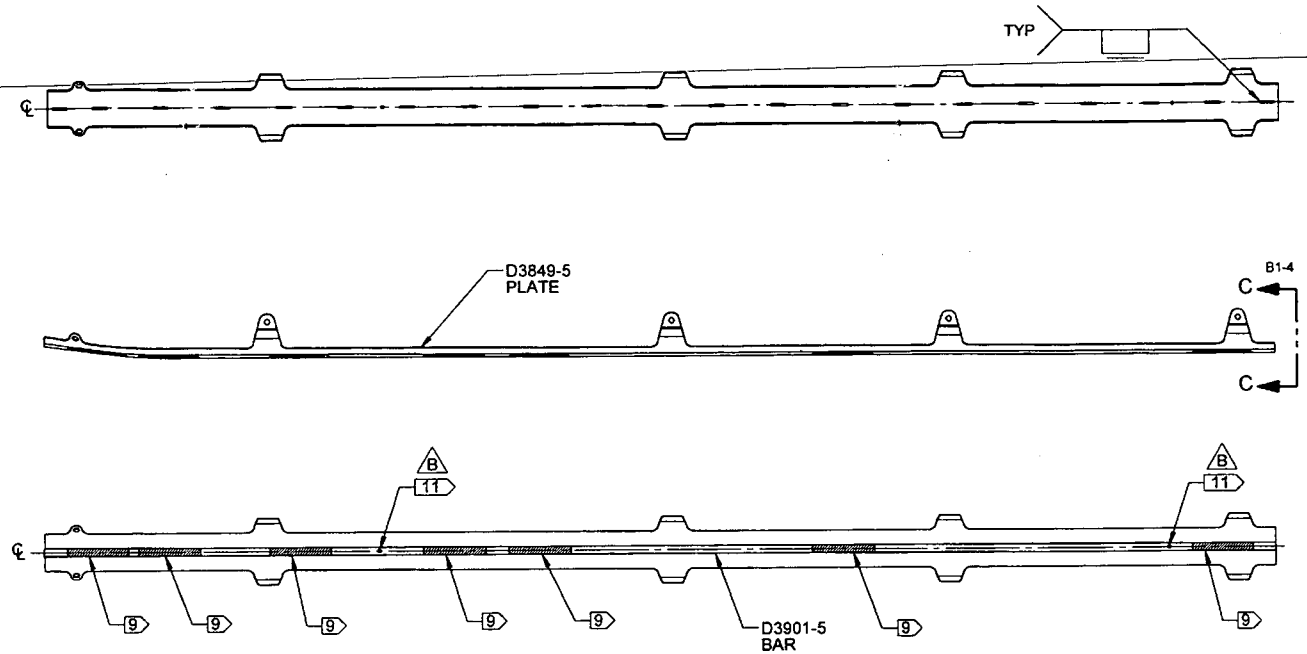

SHOP COPY
REQUESTED
ENGINEERING
UNCONTROLLED COPY
SUBJECT TO AMENDMENT
WITHOUT NOTICE
WORK ORDER
NO. 53031

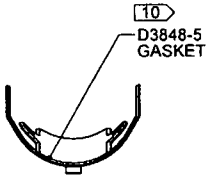

SECTION C-C C2-4
SCALE 2X

D3849-045 AFT WEARPLATE ASSY, FLOAT GEAR

RELEASED 09/03/15

NOTES:
1) MATERIAL: N/A
2) FINISH: POWDER COAT "GREY SANDTEX" (4.3.5.6) PER DART QSI 005 4.3
3) TOLERANCES: PER DART QSI 018 UNLESS OTHERWISE NOTED
4) UNITS: INCHES UNLESS OTHERWISE NOTED
5) BREAK SHARP EDGES: 0.005 TO 0.010 MAX
6) IDENTIFICATION: IDENTIFY WITH DART P/N "D3849-045" USING YELLOW PAINT MARKER AT INSIDE SURFACE
7) WEIGHT: D3849-045 = 5.98 lbs
8) WELDING: PER QSI 004
9) 2059B HARDCOAT WELD, 0.19 THICK x 0.50 WIDE, FLUSH WITH D3849-5 BAR ON ALL 3 SURFACES
10) AFTER FINISH, BOND D3848-5 GASKET TO INNER SURFACE OF WEARPLATE USING A THIN LAYER OF 3M 1300/1300L SCOTCH GRIP ADHESIVE
B 11) TRANSFER DRILL Ø0.188 HOLES FROM D3849-5 PLATE TO D3901-5 BAR

DESIGN	RF	**DART AEROSPACE USA, INC.** PORT HADLOCK, WA
DRAWN	RF	
CHECKED		DRAWING NO. D3849 — REV. B — SHEET 4 OF 10
MFG. APPR.		
APPROVED		TITLE: WEARPLATE ASSY — SCALE: NTS
DE APPR.		
DATE	09.06.30	

COPYRIGHT © 2009 BY DART AEROSPACE USA, INC.
THIS DOCUMENT IS PRIVATE AND CONFIDENTIAL AND IS SUPPLIED ON THE EXPRESS CONDITION THAT IT IS NOT TO BE USED FOR ANY PURPOSE OR COPIED OR COMMUNICATED TO ANY OTHER PERSON WITHOUT WRITTEN PERMISSION FROM DART AEROSPACE USA, INC.

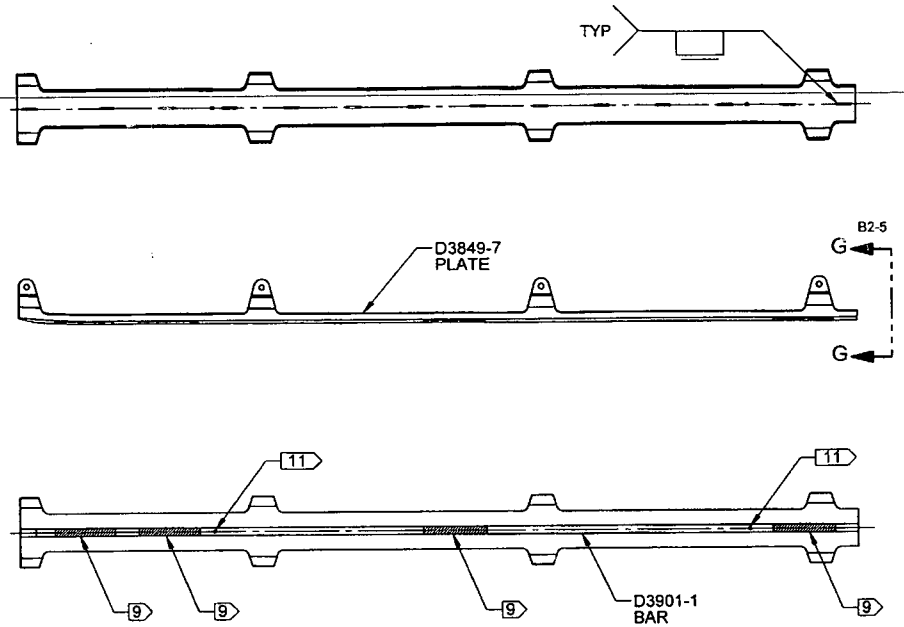

D3849-047 FWD WEARPLATE ASSY, FLOAT GEAR B

SHOP COPY
RETURN TO
ENGINEERING
UNCONTROLLED
SUBJECT TO AMENDMENT
WITHOUT NOTICE
WORK ORDER
NO. 53081

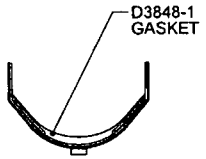

SECTION G-G C3-5
SCALE 2X

RELEASED
09/07/12

NOTES:
1) MATERIAL: N/A
2) FINISH: POWDER COAT "GREY SANDTEX" (4.3.5.6) PER DART QSI 005 4.3
3) TOLERANCES: PER DART QSI 018 UNLESS OTHERWISE NOTED
4) UNITS: INCHES UNLESS OTHERWISE NOTED
5) BREAK SHARP EDGES: 0.005 TO 0.010 MAX
6) IDENTIFICATION: IDENTIFY WITH DART P/N "D3849-047" USING YELLOW PAINT MARKER AT INSIDE SURFACE
7) WEIGHT: D3849-047 = 4.26 lbs
8) WELDING: PER QSI 004
9) 2059B HARDCOAT WELD, 0.19 THICK x 0.50 WIDE, FLUSH WITH D3901-1 BAR ON ALL 3 SURFACES
10) AFTER FINISH, BOND D3848-7 GASKET TO INNER SURFACE OF WEARPLATE USING A THIN LAYER OF 3M 1300/1300L SCOTCH GRIP ADHESIVE
11) TRANSFER DRILL Ø0.188 HOLES FROM D3849-7 PLATE TO D3901-1 BAR

DESIGN	RF	**DART AEROSPACE USA, INC.** PORT HADLOCK, WA
DRAWN	RF	
CHECKED	RF	DRAWING NO. D3849 — REV. B — SHEET 5 OF 10
MFG. APPR.		
APPROVED		TITLE WEARPLATE ASSY — SCALE NTS
DE APPR.		
DATE	09.06.30	

COPYRIGHT © 2009 BY DART AEROSPACE USA, INC.
THIS DOCUMENT IS PRIVATE AND CONFIDENTIAL AND IS SUPPLIED ON THE EXPRESS CONDITION THAT IT IS NOT TO BE USED FOR ANY PURPOSE OR COPIED OR COMMUNICATED TO ANY OTHER PERSON WITHOUT WRITTEN PERMISSION FROM DART AEROSPACE USA, INC.

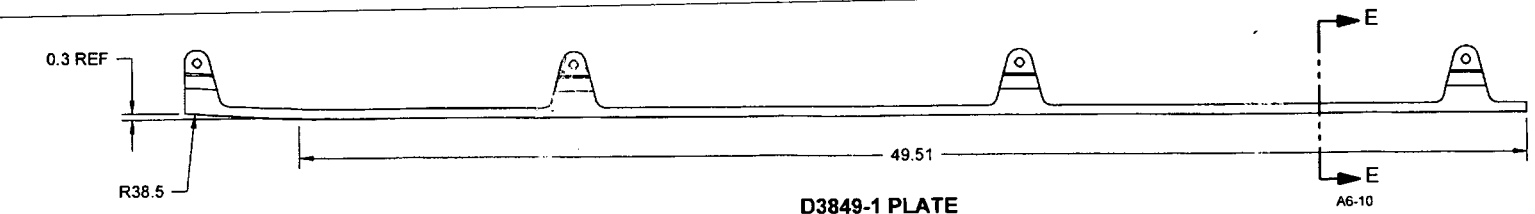

D3849-1 PLATE
(MAKE FROM D3849-1F)

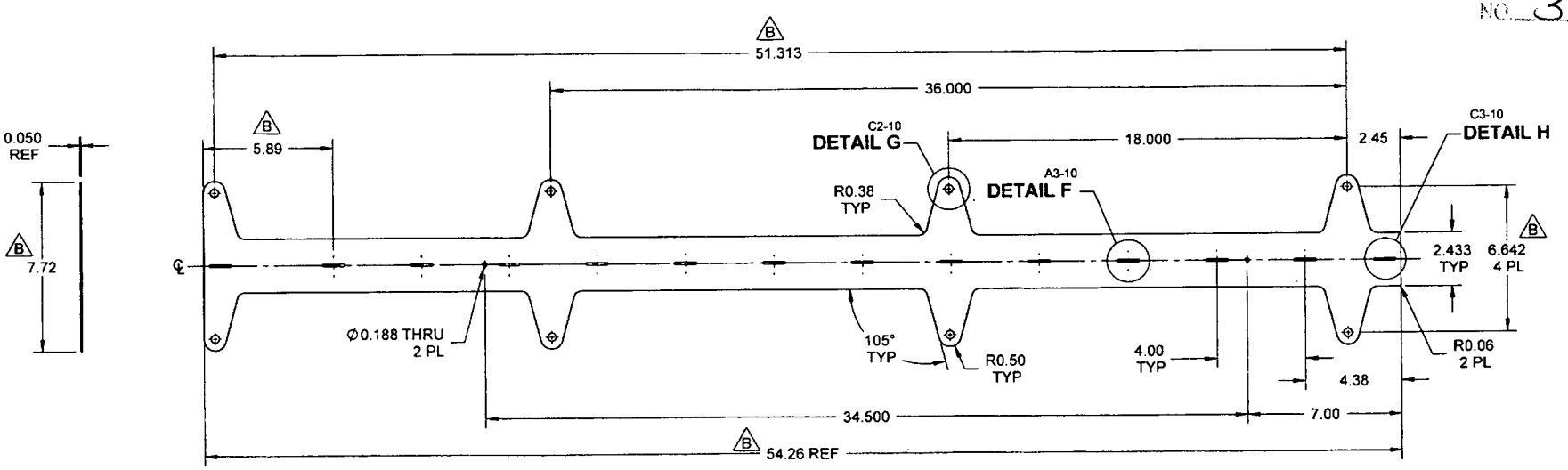

D3849-1F FLAT PATTERN B

SHOP COPY
RETURN TO
ENGINEERING
UNCONTROLLED COPY
SUBJECT TO AMENDMENT
WITHOUT NOTICE
WORK ORDER
NO. 53031

RELEASED
09/02/15

NOTES:
1) MATERIAL: AISI 304/316 STAINLESS STEEL SHEET PER AMS 5513 OR 5524
18 GAUGE 0.050 THICK, (REF. DART SPEC. M304S18GA)
2) FINISH: NONE
3) TOLERANCES: PER DART QSI 018 UNLESS OTHERWISE NOTED
4) UNITS: INCHES UNLESS OTHERWISE NOTED
5) BREAK SHARP EDGES: 0.005 TO 0.010 MAX
6) IDENTIFICATION: NONE
7) WEIGHT: 2.33 lbs

DESIGN	RF	**DART AEROSPACE USA, INC.** PORT HADLOCK, WA
DRAWN	RF	
CHECKED		DRAWING NO. D3849 — REV. B — SHEET 6 OF 10
MFG. APPR.		
APPROVED		TITLE: WEARPLATE ASSY — SCALE: NTS
DE APPR.		
DATE	09.06.30	

COPYRIGHT © 2009 BY DART AEROSPACE USA, INC.
THIS DOCUMENT IS PRIVATE AND CONFIDENTIAL AND IS SUPPLIED ON THE EXPRESS CONDITION THAT IT IS NOT TO BE USED FOR ANY PURPOSE OR COPIED OR COMMUNICATED TO ANY OTHER PERSON WITHOUT WRITTEN PERMISSION FROM DART AEROSPACE USA, INC.

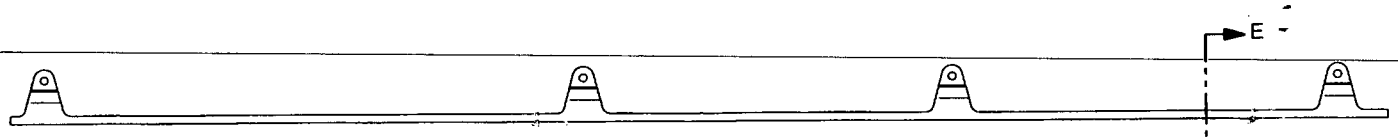

D3849-3 PLATE
(MAKE FROM D3849-3F)

SHOP COPY
RETURN TO
ENGINEERING
UNCONTROLLED COPY
SUBJECT TO ALTERATION
WITHOUT NOTICE
WORK ORDER
NO. 53031

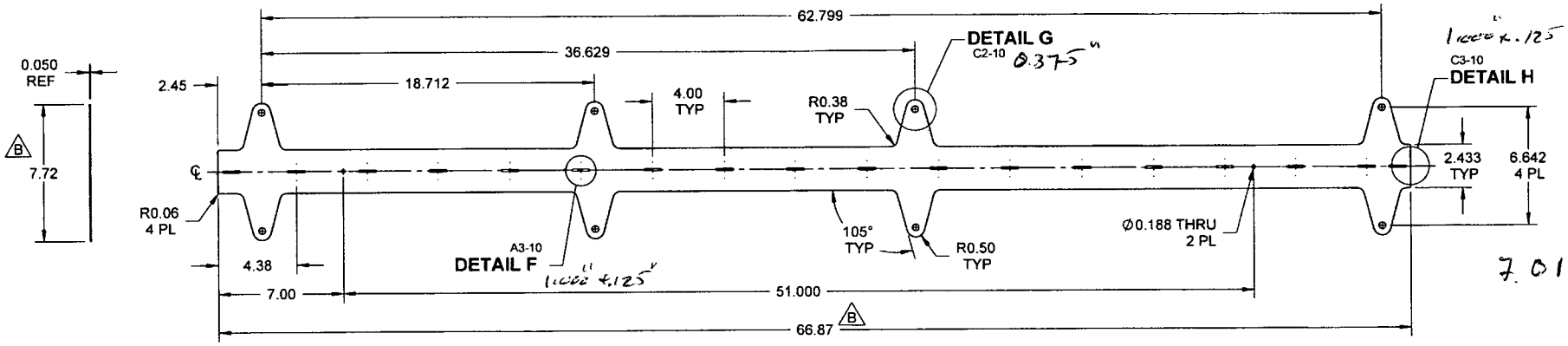

7.017

D3849-3F FLAT PATTERN B

RELEASED
09/07/15

NOTES:
1) MATERIAL: AISI 304/316 STAINLESS STEEL SHEET PER AMS 5513 OR 5524
18 GAUGE 0.050 THICK, (REF. DART SPEC. M304S18GA)
2) FINISH: NONE
3) TOLERANCES: PER DART QSI 018 UNLESS OTHERWISE NOTED
4) UNITS: INCHES UNLESS OTHERWISE NOTED
5) BREAK SHARP EDGES: 0.005 TO 0.010 MAX
6) IDENTIFICATION: NONE
7) WEIGHT: 2.82 lbs

DESIGN	RF	**DART AEROSPACE USA, INC.** PORT HADLOCK, WA
DRAWN	RF	
CHECKED		DRAWING NO. D3849 — REV. B — SHEET 7 OF 10
MFG. APPR.		
APPROVED		TITLE: WEARPLATE ASSY — SCALE: NTS
DE APPR.		
DATE	09.06.30	

COPYRIGHT © 2009 BY DART AEROSPACE USA, INC.
THIS DOCUMENT IS PRIVATE AND CONFIDENTIAL AND IS SUPPLIED ON THE EXPRESS CONDITION THAT IT IS NOT TO BE USED FOR ANY PURPOSE OR COPIED OR COMMUNICATED TO ANY OTHER PERSON WITHOUT WRITTEN PERMISSION FROM DART AEROSPACE USA, INC.

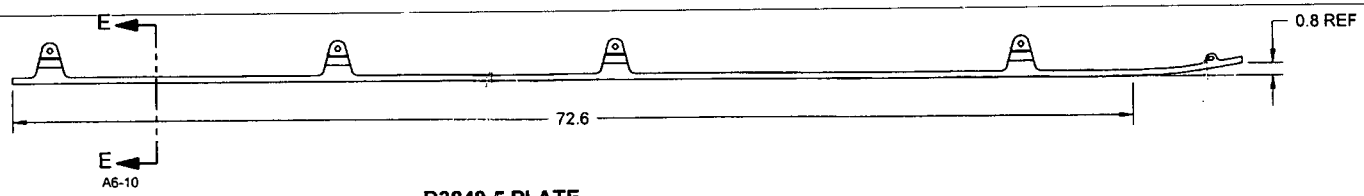

D3849-5 PLATE
(MAKE FROM D3849-5F)

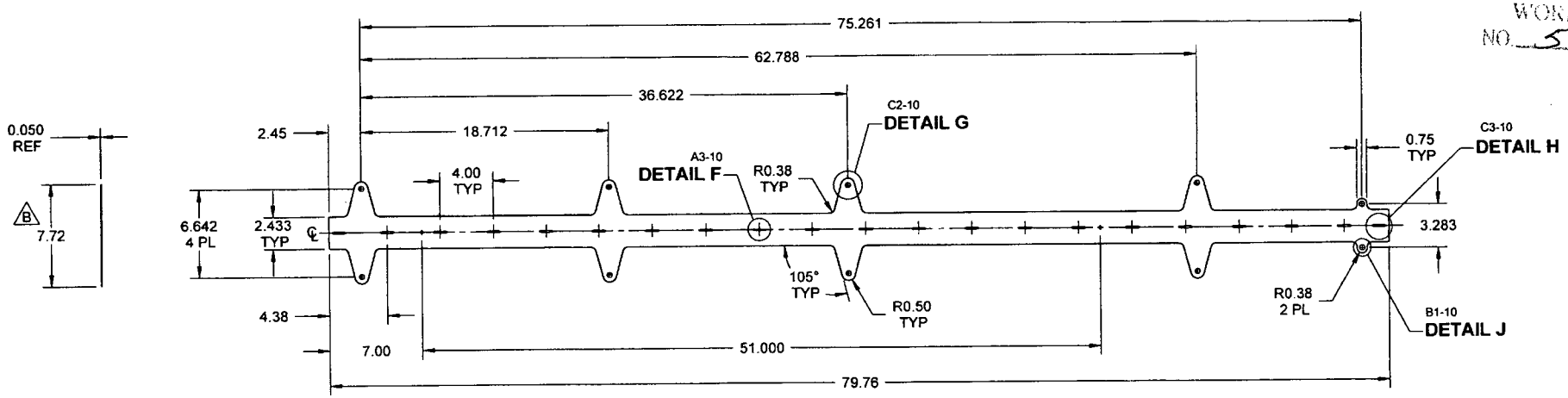

D3849-5F FLAT PATTERN B

RELEASED 9/07/15

SHOP COPY
RETURN TO
ENGINEERING
UNCONTROLLED COPY
SUBJECT TO CHANGE
WITHOUT NOTICE
WORK ORDER
NO. 53031

NOTES:
1) MATERIAL: AISI 304/316 STAINLESS STEEL SHEET PER AMS 5513 OR 5524
18 GAUGE 0.050 THICK, (REF. DART SPEC. M304S18GA)
2) FINISH: NONE
3) TOLERANCES: PER DART QSI 018 UNLESS OTHERWISE NOTED
4) UNITS: INCHES UNLESS OTHERWISE NOTED
5) BREAK SHARP EDGES: 0.005 TO 0.010 MAX
6) IDENTIFICATION: NONE
7) WEIGHT: 3.30 lbs

DESIGN	RF	DART AEROSPACE USA, INC. PORT HADLOCK, WA
DRAWN	RF	
CHECKED		DRAWING NO. D3849 — REV. B — SHEET 8 OF 10
MFG. APPR.		
APPROVED		TITLE: WEARPLATE ASSY — SCALE: NTS
DE APPR.		
DATE	09.06.30	

COPYRIGHT © 2009 BY DART AEROSPACE USA, INC.
THIS DOCUMENT IS PRIVATE AND CONFIDENTIAL AND IS SUPPLIED ON THE EXPRESS CONDITION THAT IT IS NOT TO BE USED FOR ANY PURPOSE OR COPIED OR COMMUNICATED TO ANY OTHER PERSON WITHOUT WRITTEN PERMISSION FROM DART AEROSPACE USA, INC.

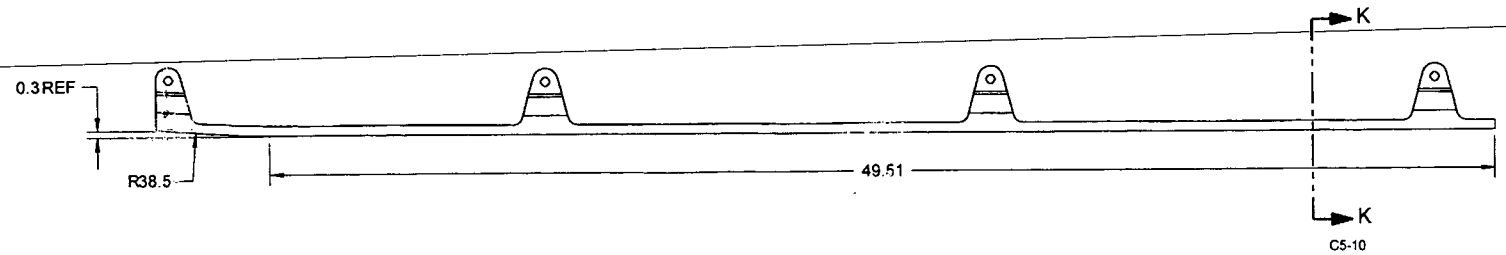

D3849-7 PLATE (B)
(MAKE FROM D3849-7F)

SHOP COPY
REFERENCE
ENGINEERING
UNCONTROLLED COPY
SUBJECT TO ALL
WITHOUT
WORK
NO. 5303

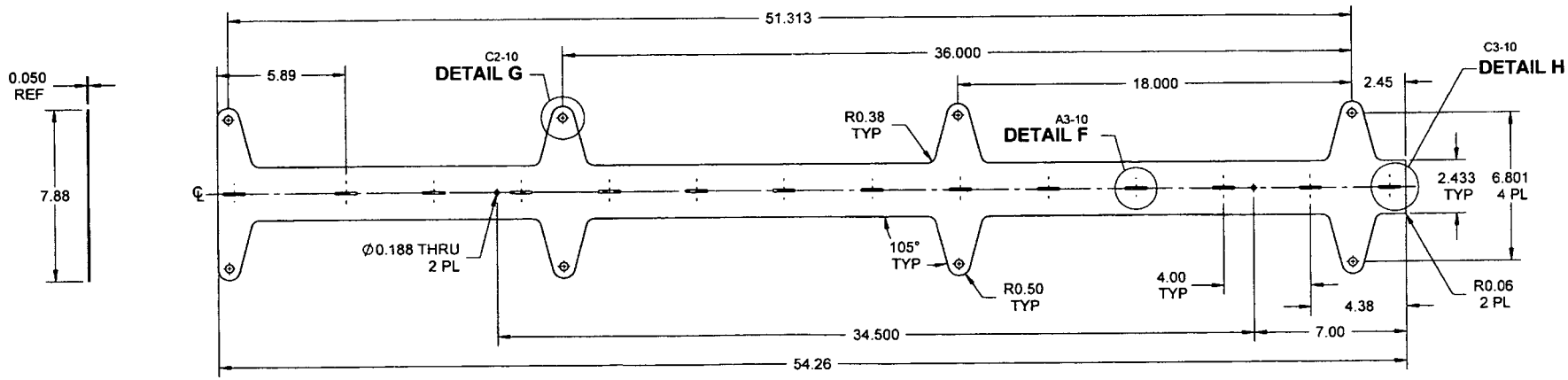

D3849-7F FLAT PATTERN (B)

RELEASED 09/07/15

NOTES:
1) MATERIAL: AISI 304/316 STAINLESS STEEL SHEET PER AMS 5513 OR 5524
18 GAUGE 0.050 THICK, (REF. DART SPEC. M304S18GA)
2) FINISH: NONE
3) TOLERANCES: PER DART QSI 018 UNLESS OTHERWISE NOTED
4) UNITS: INCHES UNLESS OTHERWISE NOTED
5) BREAK SHARP EDGES: 0.005 TO 0.010 MAX
6) IDENTIFICATION: NONE
7) WEIGHT: 2.34 lbs

DESIGN	RF	**DART AEROSPACE USA, INC.** PORT HADLOCK, WA
DRAWN	RF	
CHECKED		DRAWING NO. D3849 — REV. B — SHEET 9 OF 10
MFG. APPR.		
APPROVED		TITLE: WEARPLATE ASSY — SCALE: NTS
DE APPR.		
DATE	09.06.30	

COPYRIGHT © 2009 BY DART AEROSPACE USA, INC.
THIS DOCUMENT IS PRIVATE AND CONFIDENTIAL AND IS SUPPLIED ON THE EXPRESS CONDITION THAT IT IS NOT TO BE USED FOR ANY PURPOSE OR COPIED OR COMMUNICATED TO ANY OTHER PERSON WITHOUT WRITTEN PERMISSION FROM DART AEROSPACE USA, INC.

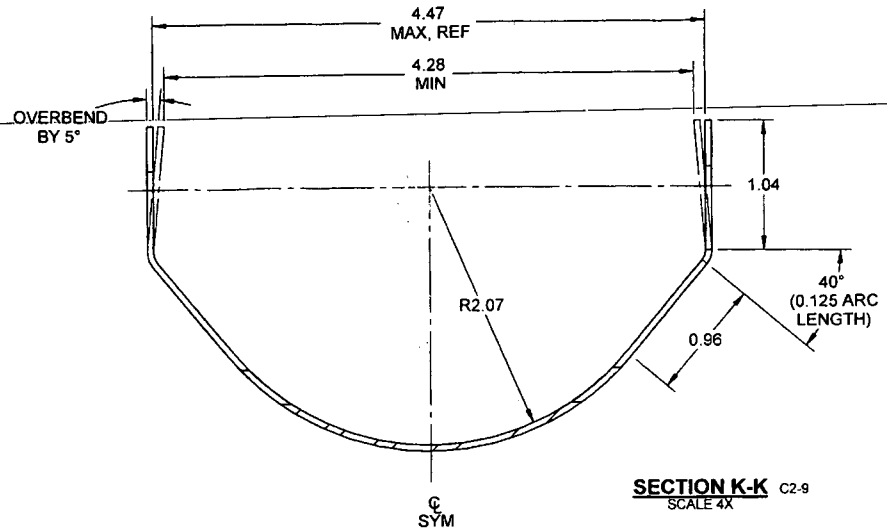

SECTION K-K C2-9
SCALE 4X

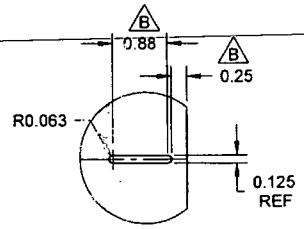

DETAIL H
SLOT DETAIL TYP C1-6 C1-7 C1-8 C1-9
SCALE 2X

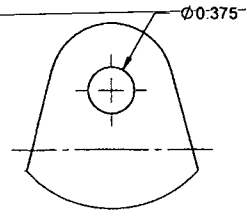

B
DETAIL G C4-6 C4-7 C4-8 C6-9
SLOT DETAIL TYP
SCALE 4X

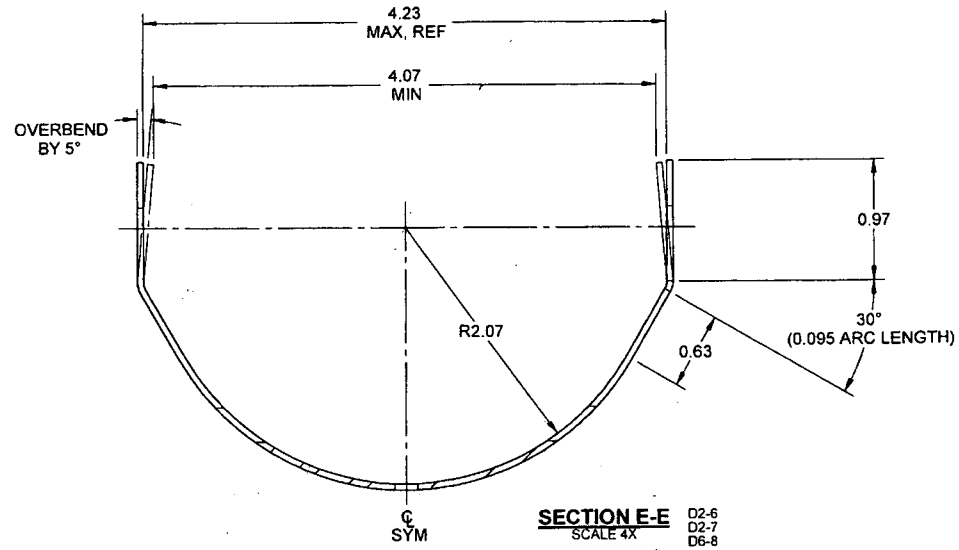

SECTION E-E D2-6 D2-7 D6-8
SCALE 4X

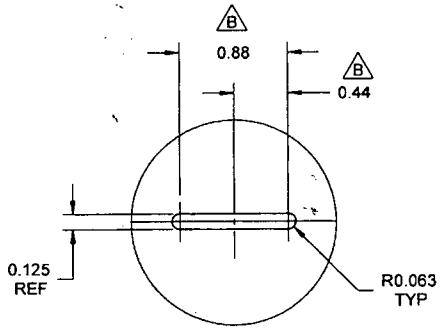

DETAIL F
SLOT DETAIL TYP C3-6 B6-7 C5-8 B3-9
SCALE 4X

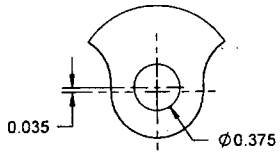

B
DETAIL J B1-8
DETAIL TYP
SCALE 8X

RELEASED
09/07/15

DESIGN	RF	**DART AEROSPACE USA, INC.** PORT HADLOCK, WA
DRAWN	RF	
CHECKED		DRAWING NO. D3849 — REV. B — SHEET 10 OF 10
MFG. APPR.		
APPROVED		TITLE WEARPLATE ASSY — SCALE NTS
DE APPR.		
DATE	09.06.30	

COPYRIGHT © 2009 BY DART AEROSPACE USA, INC.
THIS DOCUMENT IS PRIVATE AND CONFIDENTIAL AND IS SUPPLIED ON THE EXPRESS CONDITION THAT IT IS NOT TO BE USED FOR ANY PURPOSE OR COPIED OR COMMUNICATED TO ANY OTHER PERSON WITHOUT WRITTEN PERMISSION FROM DART AEROSPACE USA, INC.